Grown Up Blouse with Gathered Neckline

Design & work: Kokka Fabric

Size: M

have fun with KOKKA fabric! produced by KOKKA

kokka-fabric.com

The craft projects and works featured in kokka-fabric.com are strictly for personal use and enjoyment. Please refrain from selling handmade items using the same exact design (including the pieces made in different fabrics) featured in kokka-fabric.com.

Materials & Tools

- □ Fabric: about 115cm wide × 160cm
- □ Fusible interfacing (light weight): about 90cm wide x 20cm
- □ Button: about 11.5cm wide x one piece

Fabric shown for this sample: LG-21100-1A

Pattern

Unit: cm 【 】: Seam allowance. Add 1cm seam allowance unless specified otherwise.

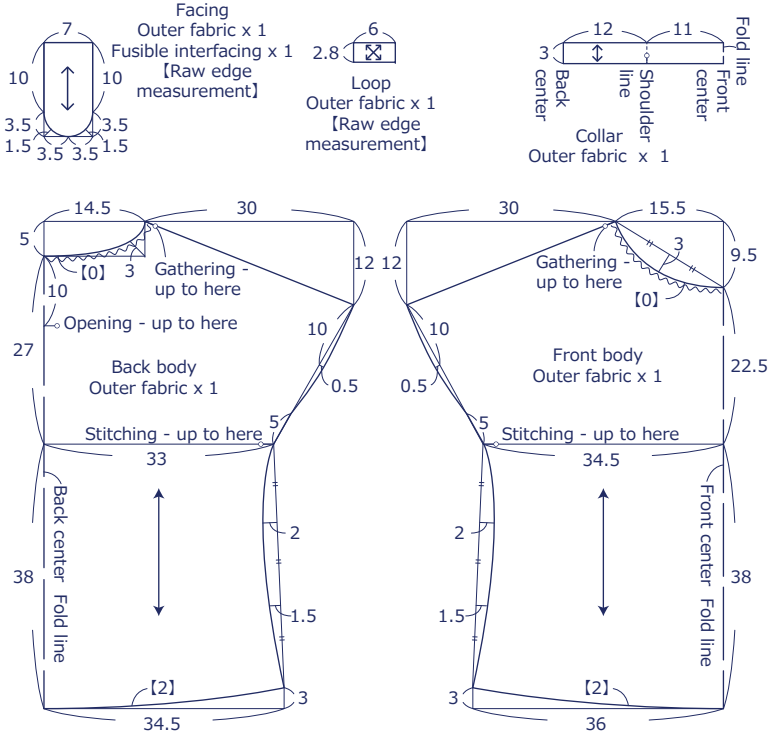

※ Adhere fusible interfacing on the back of the facing.

Instructions

Front Side - (FrS), Reverse Side (RvS)

1. With the front sides facing each other, sew together the back body and facing

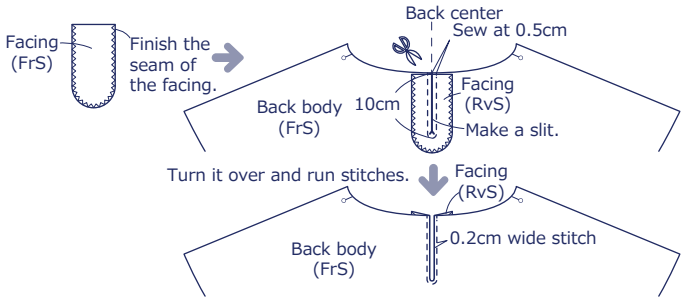

2. Make gathering around the neckline

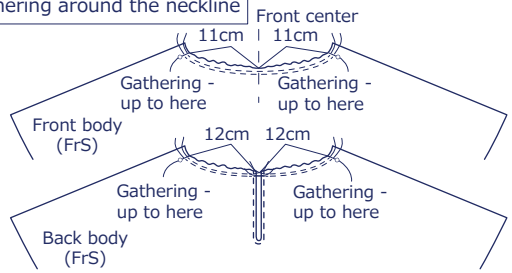

3. With the front sides facing each other, sew together the front and back bodies at the shoulder

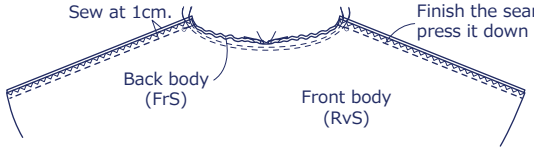

4. With the front sides facing each other, sew together the sides of the front and back bodies

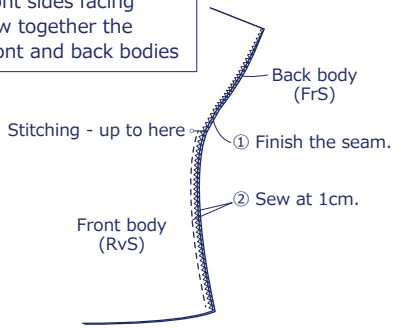

5. Make the loop and baste it to the collar

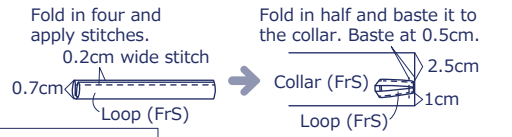

6. Make the collar

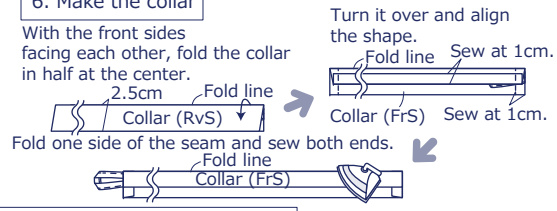

7. Sew together the body and collar

With the front sides facing each other, sew together the body and collar.

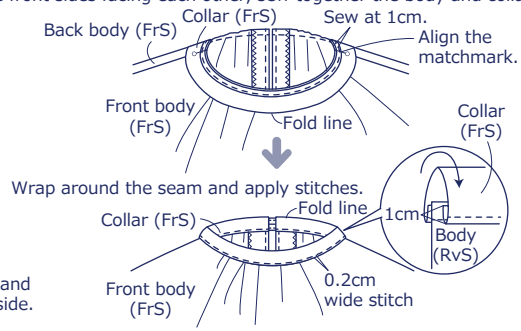
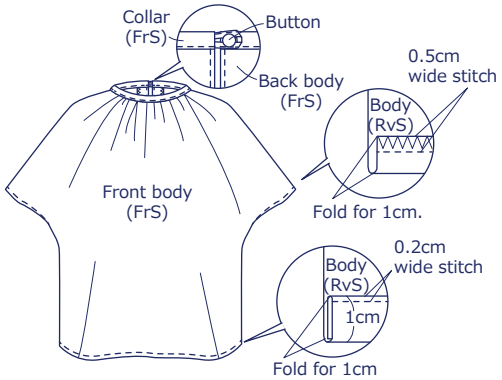
8. Fold the sleeve edge in two and the hem in three. Apply stitches. Attach the button on the collar to finish.