Pouch with a spring-loaded clasp

Design & work: Mioko Sugino

Size: 11.5cm (l)　12cm (w)　6cm (d)

have fun with KOKKA fabric!　produced by KOKKA

kokka-fabric.com

The craft projects and works featured in kokka-fabric.com are strictly for personal use and enjoyment.
Please refrain from selling handmade items using the same exact design (including the pieces made in different fabrics) featured in kokka-fabric.com.

Materials

- □ Fabric (Opening fabric (polka dot print)): 20cm×10cm
  (Panel): 40cm×10cm
  (Bottom, Handle (solid)): 30cm×20cm
  (Lining fabric (stripe)): 20cm×40cm
- □ Metal spring-loaded clasp: 12cm(l)×1

Fabric shown for this sample: candy creek P38700-700 (D)

Pattern and Cutting Layout

All measurements are in centimeters (cm). The edges are left cut. (including 1cm seam)

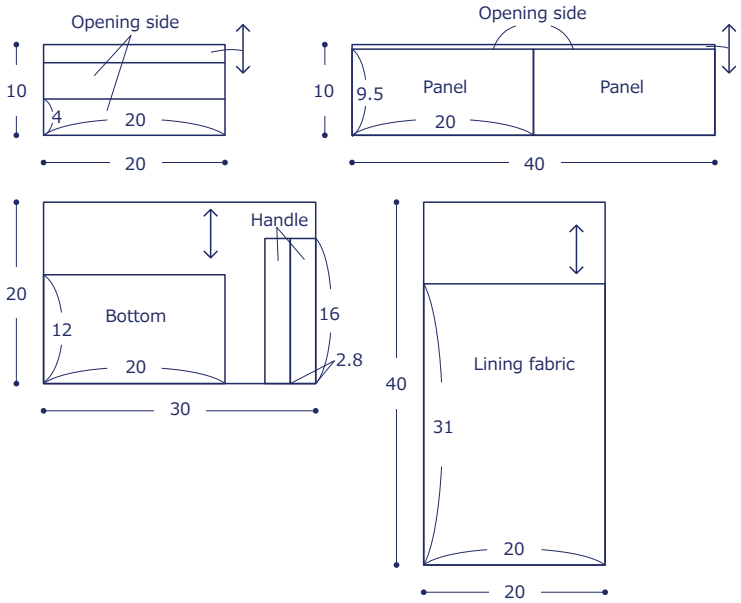

Instructions

1. Make the handle.

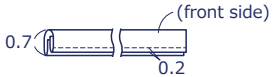

With the front sides facing outside, fold in four and sew.
*Make two pieces

2. Make the outer fabric.

①With the front sides facing each other, sew together the panel and bottom.

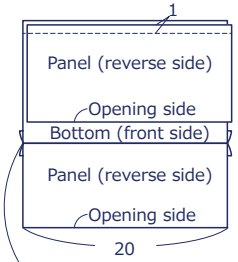

② Press the seam open.

③With the front sides facing each other, sew together the panel and opening fabric with the handle in-between.

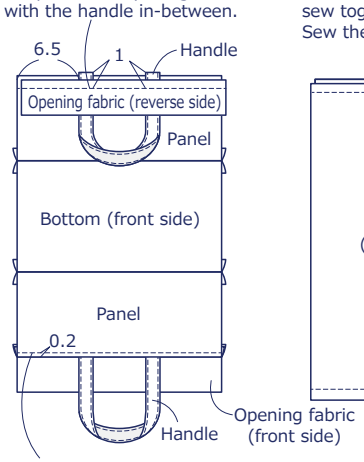

④Press the seam down to the panel side. Run stitches.

3. Sew together the outer and lining fabrics.

① With the front sides facing each other, sew together the outer and lining fabrics. Sew the opening, avoiding the handles.

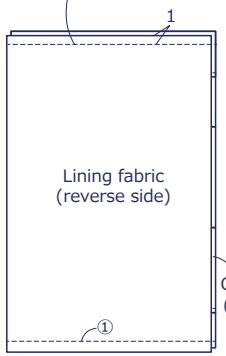

② Re-fold and align the opening. Sew the sides leaving an opening for the clasp.

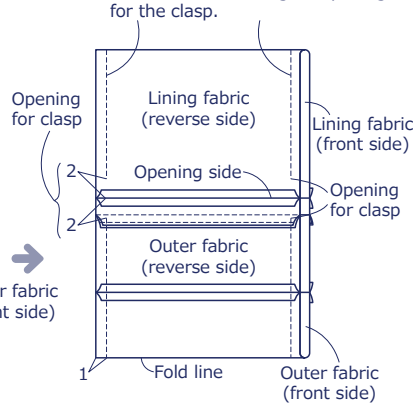

4. Make the gusset.

① Align the center of the bottom and sides to make a triangle on the bottom corner. Sew the gusset.

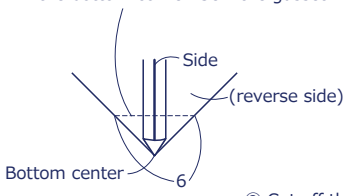

② Cut off the excess seam. Run zigzag stitches.

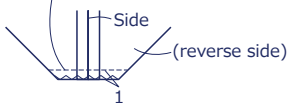

*Make two on the outer bag, and two on the lining bag.

5. Finish the opening for the clasp.

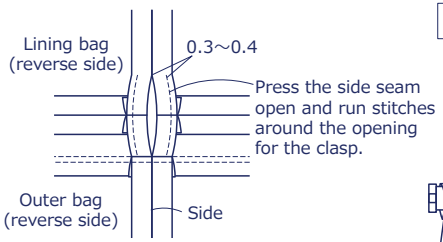

*Finish two places.

6. Insert the metal spring-loaded clasp.

① Turn the bag inside out, and put the lining bag inside. Run concealed stitches along where the opening fabric and panels are pieced together.

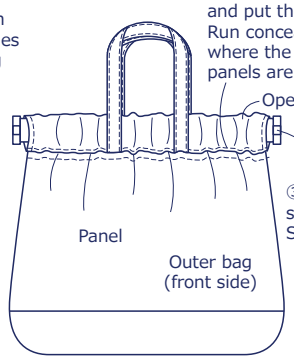

③ Insert the metal spring-loaded clasp. Secure it with the pin.