Blouse with Puffy Sleeves

Design & work: Naomi Nohara (lepolepo)

Size: for 110cm height

have fun with KOKKA fabric! produced by KOKKA

kokka-fabric.com

The craft projects and works featured in kokka-fabric.com are strictly for personal use and enjoyment. Please refrain from selling handmade items using the same exact design (including the pieces made in different fabrics) featured in kokka-fabric.com.

Materials

- □ Fabric: 108cm wide x 1m
- □ Elastic tape: 50cm (0.5cm diameter)
- □ Button: One piece (1.1cm diameter)

Fabric shown for this sample: YK-56120-2A

Pattern

Unit: cm

● = Attach sleeve here

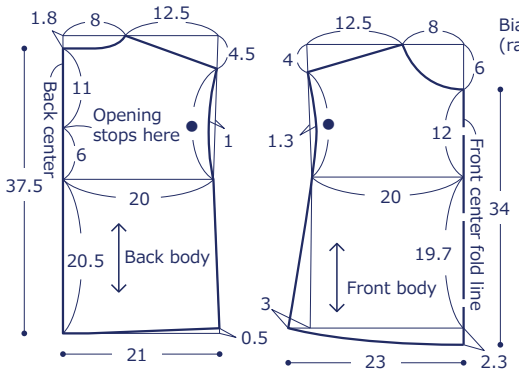

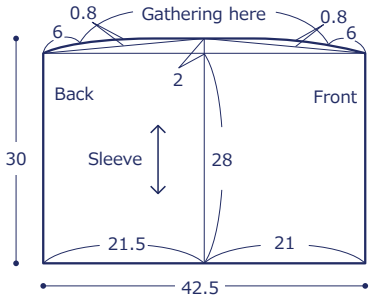

Cutting Layout

Numbers in ( ) denote seam allowance.
Add 1cm seam allowance unless specified otherwise.

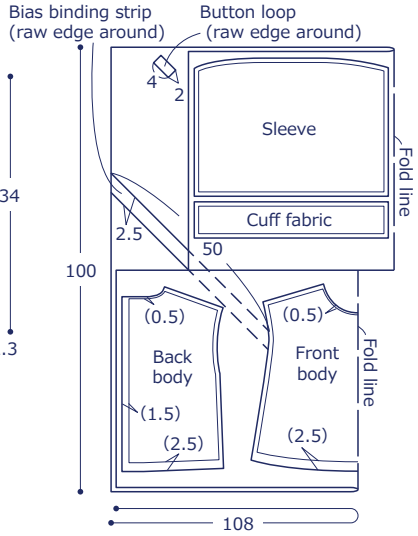

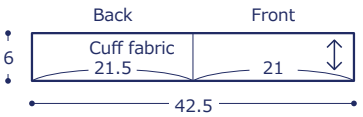

Instructions

(front) = Base color - Gray (reverse) = Base color - Black

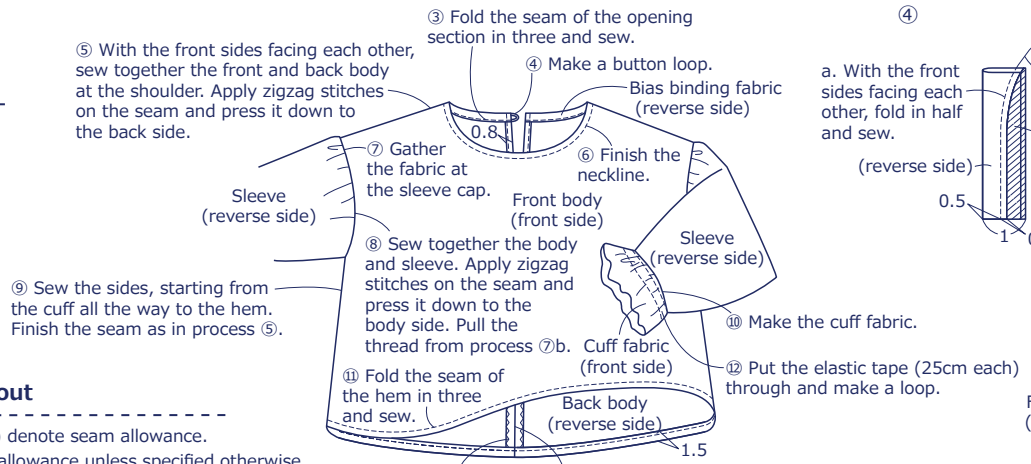

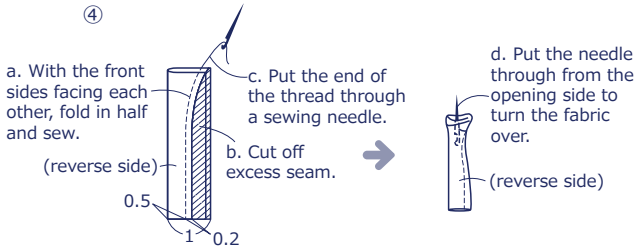

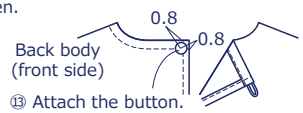

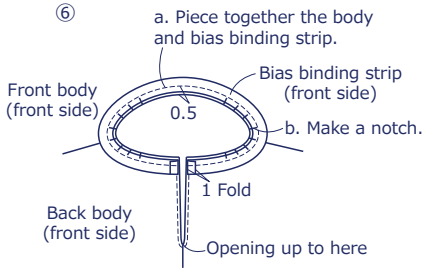

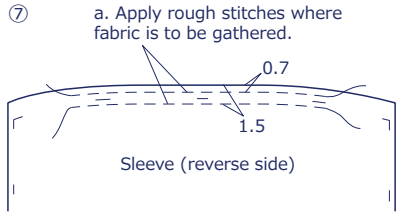
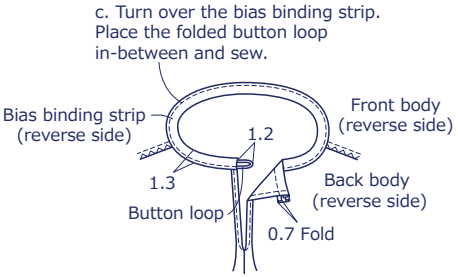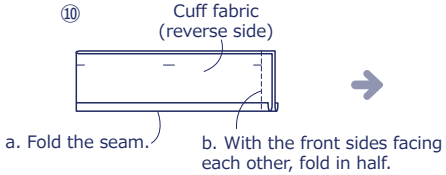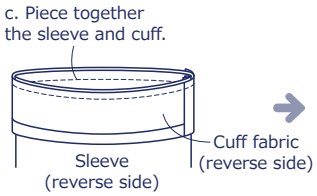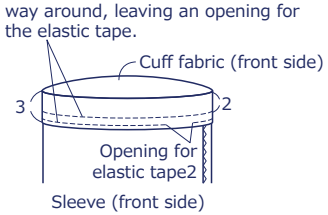
b. Pull the thread from a to the finished sleeve size and gather the fabric.