Princess Skirt

Design & Work: Masumi Saito (sinafuku)

Size: Waist 61cm Length about 58.5cm

have fun with KOKKA fabric! produced by KOKKA

kokka-fabric.com

The craft projects and works featured in kokka-fabric.com are strictly for personal use and enjoyment. Please refrain from selling handmade items using the same exact design (including the pieces made in different fabrics) featured in kokka-fabric.com.

Materials

- □ Fabric: 80cm x 1.3m
- □ Elastic Tape: 35cm (2cm wide)
- □ Lace: 158cm (7cm wide)

Fabric shown for this sample: LO36010-2D

Pattern and Cutting Layout

Unit: cm. All raw edge.

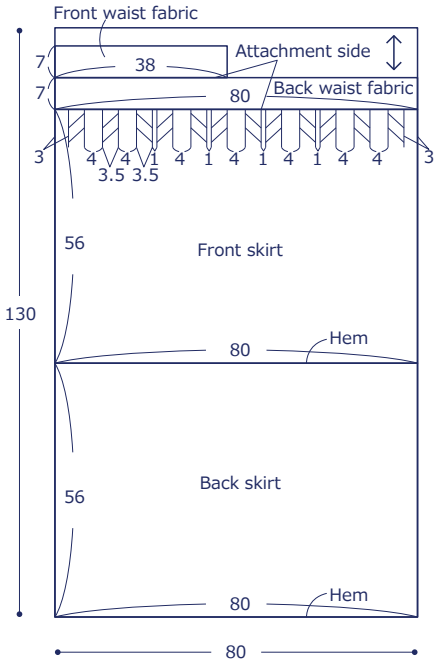

Instructions

1. Make the front skirt

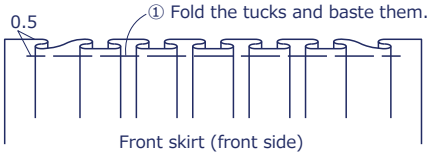

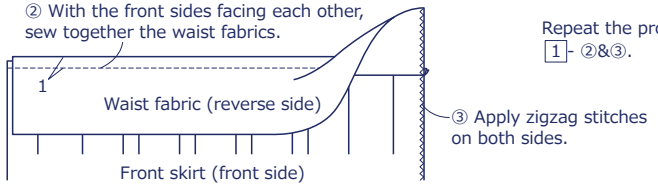

2. Make the back skirt

Repeat the process as in 1 - ②&③.

3. Sew both sides

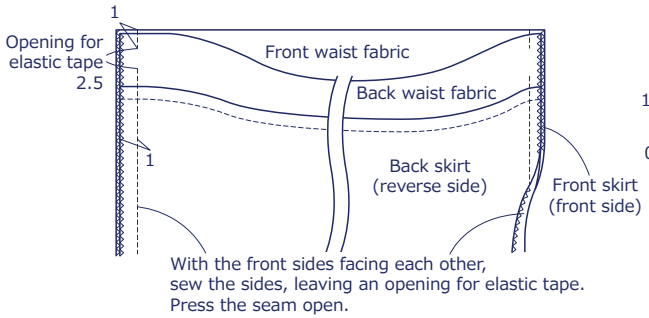

4. Sew the waist and put through the elastic tape

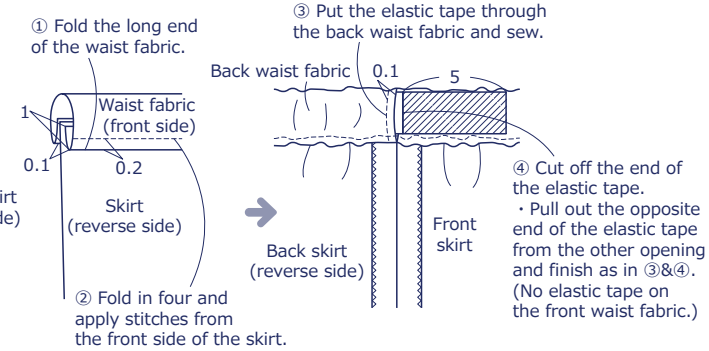
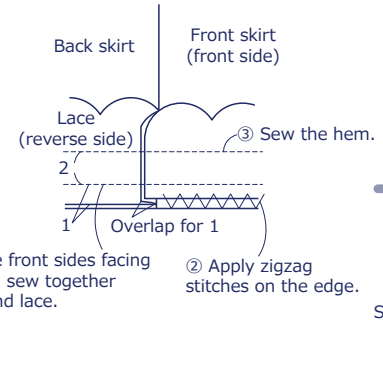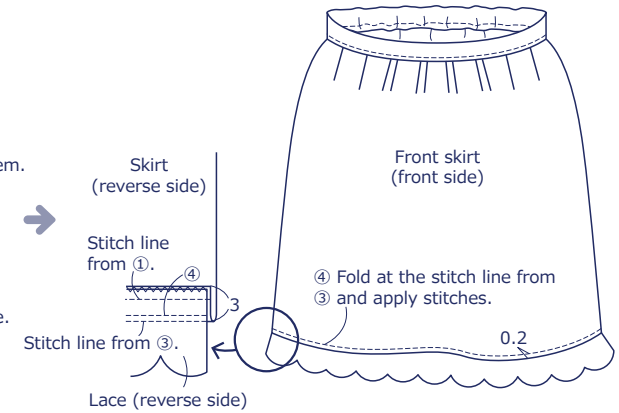
5. Attach the lace on the hem