Round Drawstring Bag

Design & work: Mioko Sugino

Size: 26cm (l) 24cm (w)

have fun with KOKKA fabric! produced by KOKKA

kokka-fabric.com

The craft projects and works featured in kokka-fabric.com are strictly for personal use and enjoyment. Please refrain from selling handmade items using the same exact design (including the pieces made in different fabrics) featured in kokka-fabric.com.

Materials

- □ Fabric: 100cm x 65cm
- □ Quilt Batting: 65cm x 30cm
- □ Waxed Cord: 0.3cm diameter x 1.4m

Fabric shown for this sample: EGX-9500-1A

Pattern and Cutting Layout

Unit: cm Add 1cm seam allowance unless specified otherwise
Use pocket pattern for outer fabric pattern making.
Cut the lining fabric with same measurement as the outer fabric.

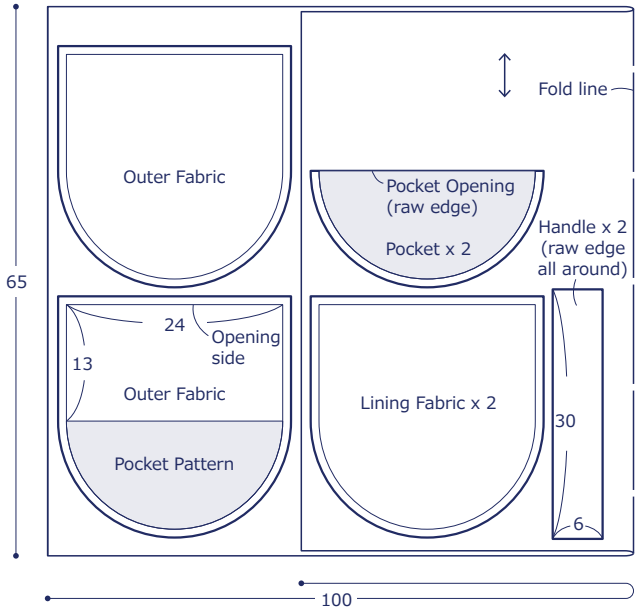

Instructions

Front Side - (FrS), Reverse Side (RvS)

1. Make the handle

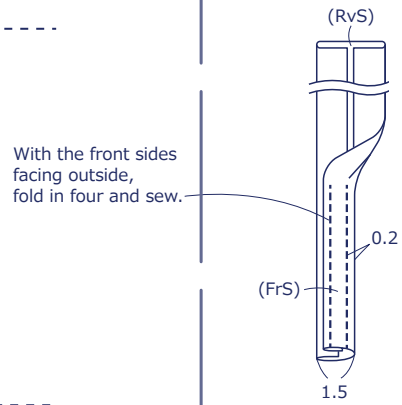

・Make two pieces.

2. Make the lining fabric

Pocket opening
①Fold pocket opening edge into thirds and sew.

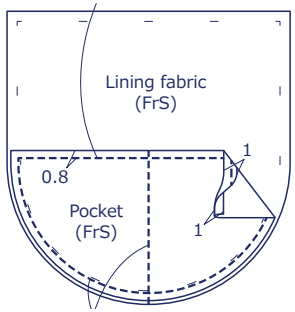

②Layer the pocket over the lining fabric. Sew the center partition to baste.
・Make two pieces.

3. Make the outer fabric

②Baste the handle.
・Make two pieces.

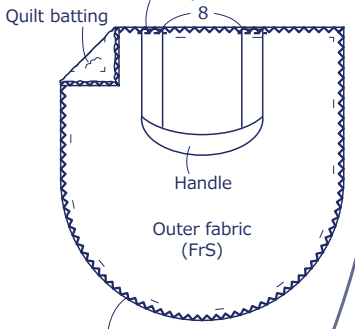

①Baste the quilt batting on the back of the outer fabric using zigzag stitches.

③Press the seam open. Secure the seam of the cord opening. (OK to do it with hand stitching)
・Repeat the same process on the other side.

②With the front sides facing each other, sew together two pieces from ①, leaving an opening for turning.

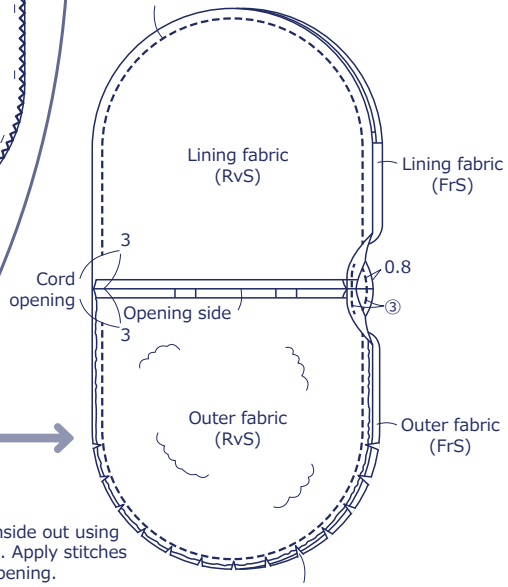

④Cut a notch along the curved seam.
・Repeat the same process on the other side.

4. Make the body

①With the front sides facing each other, sew together the outer and lining fabrics at the top opening.

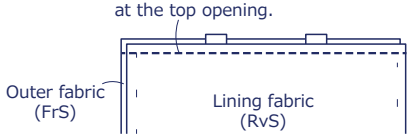

・Make two pieces.

Center fold line

Pocket
Full Scale Pattern

5. Finish the bag

①Turn the bag inside out using the cord opening. Apply stitches along the cord opening.

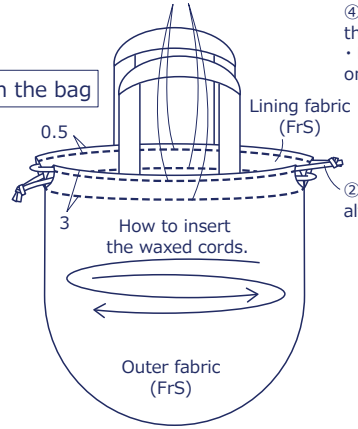

②Insert waxed cords (70cm each) alternately and tie the ends.