have fun with KOKKA fabric! produced by KOKKA
kokka-fabric.com
The craft projects and works featured in kokka-fabric.com are strictly for personal use and enjoyment. Please refrain from selling handmade items using the same exact design (including the pieces made in different fabrics) featured in kokka-fabric.com.



Big Tote

Design & work: Kokka Fabric

Size: approx. 35cm (l)
approx. 60cm (w)
approx. 18cm (gusset)
(excludes handles)

Materials

□Outer Fabric: approx. 110cm wide x 100cm

Fabric shown for this sample: YKA-46010-1A

Pattern

Unit: cm 【 】: Seam allowance
When cutting the fabric, add 1cm seam allowance unless specified otherwise.

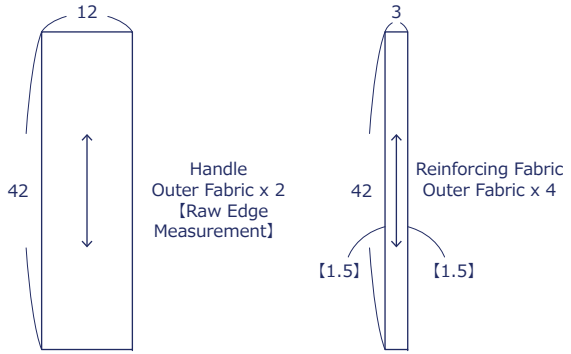

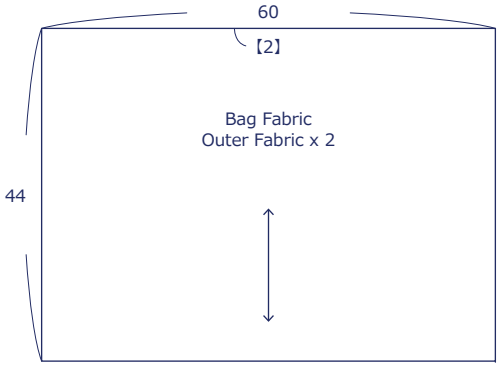

Instructions

Front Side - (FrS), Reverse Side (RvS)

1. Attach the reinforcing fabric to the bag fabric

Fold the seam allowance of the reinforcing fabric.

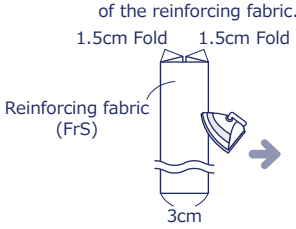

※Make four pieces

Attach to the bag fabric.

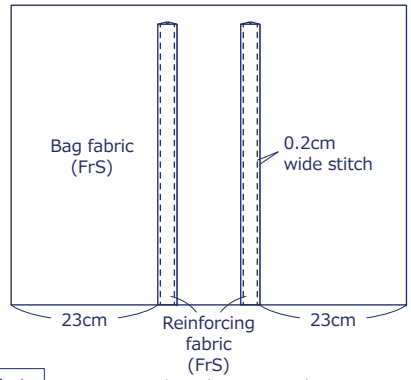

※Sew the other pair in the same way.

2. Sew the bag fabric

Finish the seam allowances along the sides and bottom of the bag fabric.

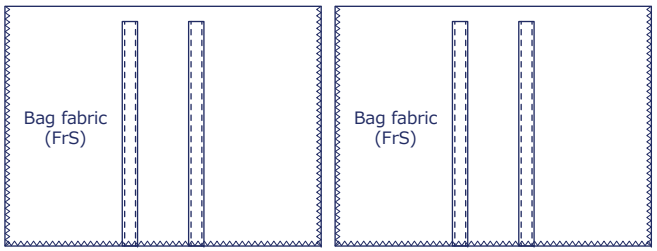

With the front sides facing each other, sew together the sides and bottom.

Fold the bottom corners into triangles and sew the gussets.

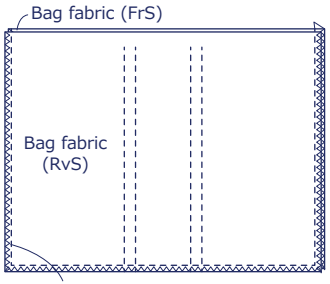

Sew with a 1cm seam allowance, and press the seam allowance open.

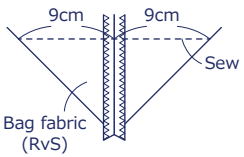

※ Sew the other side in the same way.

3. Fold the bag opening over three times and apply stitches

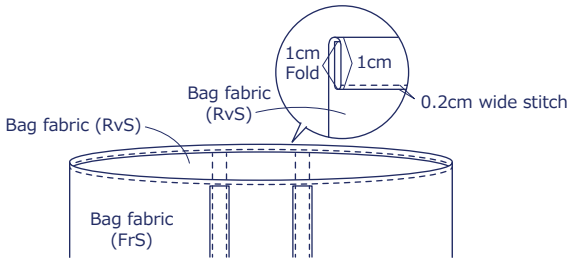

4. Make the handles, attach them to the bag fabric to finish

Fold it in quarters and sew it together.

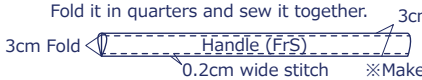

※Make two pieces

Sew over the reinforcing fabric

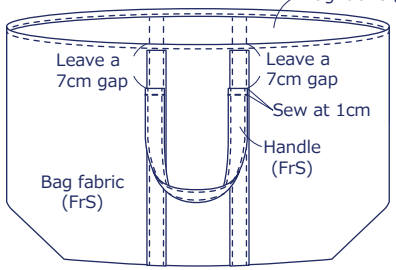

Pull up the handle and apply stitches.

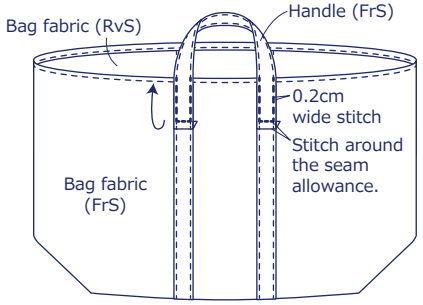

※Repeat the same process on the other side.