Peplum Tops

Design & work: Kokka Fabric

Size: M

have fun with KOKKA fabric! produced by KOKKA

kokka-fabric.com

The craft projects and works featured in kokka-fabric.com are strictly for personal use and enjoyment. Please refrain from selling handmade items using the same exact design (including the pieces made in different fabrics) featured in kokka-fabric.com.

Materials

- □Outer Fabric: about 110cm wide x 150cm
- □Fusible Interfacing (light weight): about 90cm wide x 20cm
- □ Button: about 11.5mm wide x One piece

Fabric shown for this sample: NF-1020-23

Pattern and Cutting Layout

Unit: cm 【 】: Seam allowance When cutting the fabric, add 1cm seam allowances unless otherwise stated.

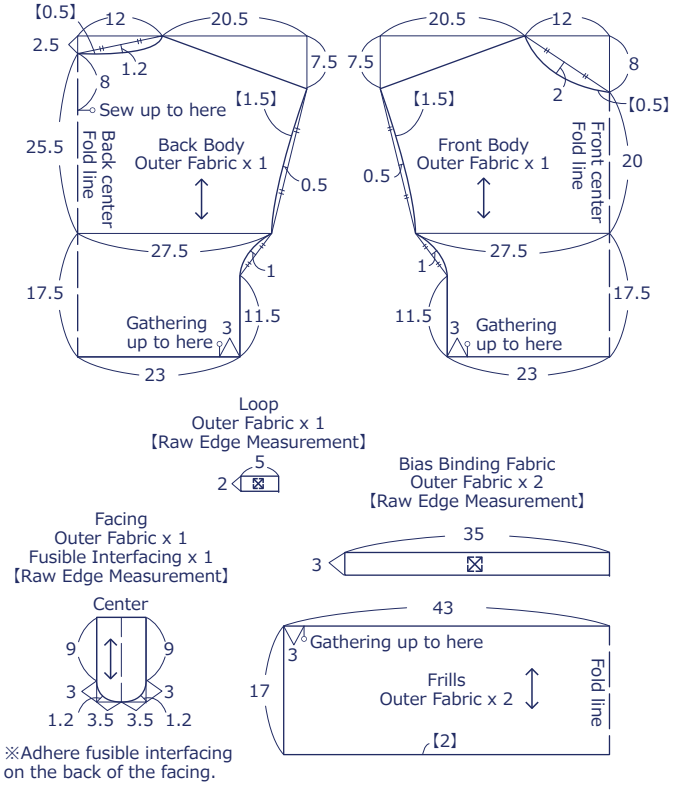

※Adhere fusible interfacing on the back of the facing.

Instructions

Front Side - (FrS), Reverse Side (RvS)

1. Gather the frill fabric. With the front sides facing each other, sew together the frill and body

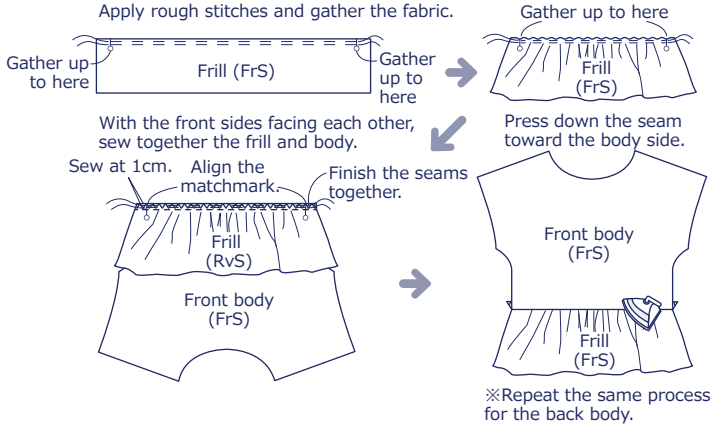

※Repeat the same process for the back body.

2. Make a loop. Baste it on the back center of the body

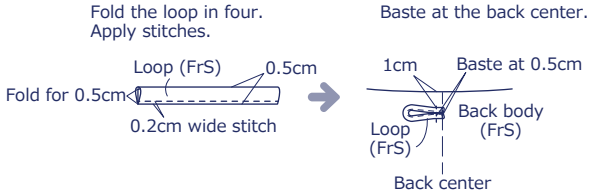

3. With the front sides facing each other, sew together the back body and facing. Turn it inside out and apply stitches

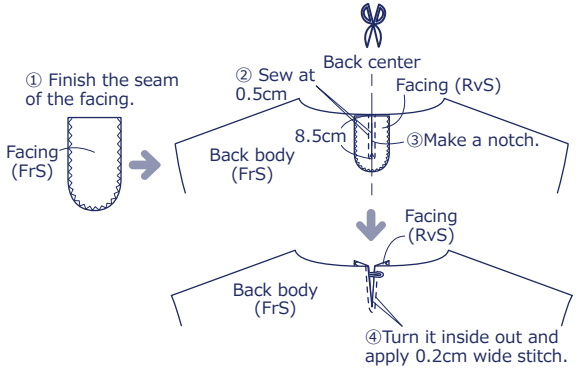

4. With the front sides facing each other, sew together the front body and back body at the shoulder and side

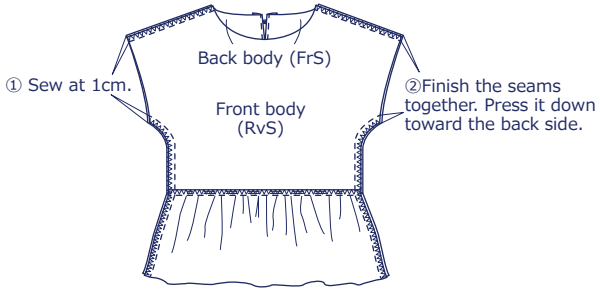

5. Finish the neckline

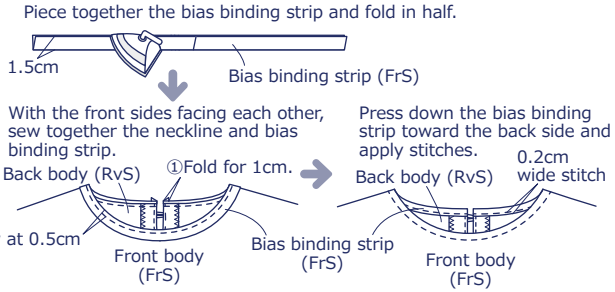

※Cut off excess bias binding strip.

6. Fold the armhole and hem in three and apply stitches

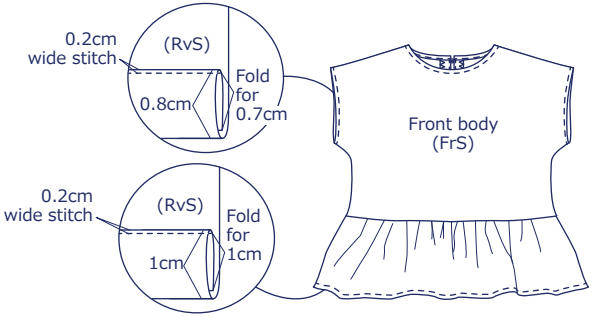
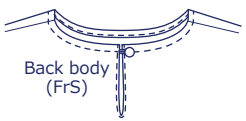
7. Attach the button at the back opening to finish