Bag with Tucked Pockets

have fun with KOKKA fabric! produced by KOKKA

kokka-fabric.com

The craft projects and works featured in kokka-fabric.com are strictly for personal use and enjoyment. Please refrain from selling handmade items using the same exact design (including the pieces made in different fabrics) featured in kokka-fabric.com.

Design & work: Mioko Sugino

Size: 20cm (l) Bottom Diameter 15cm

Materials

□Fabric: 110cm wide x 60cm
□D Ring, Swivel Hook: One piece each (1.5cm inner diameter)

Fabric shown for this sample: YGA-69030-1B

Pattern and Cutting Layout

Unit: cm All raw edge.

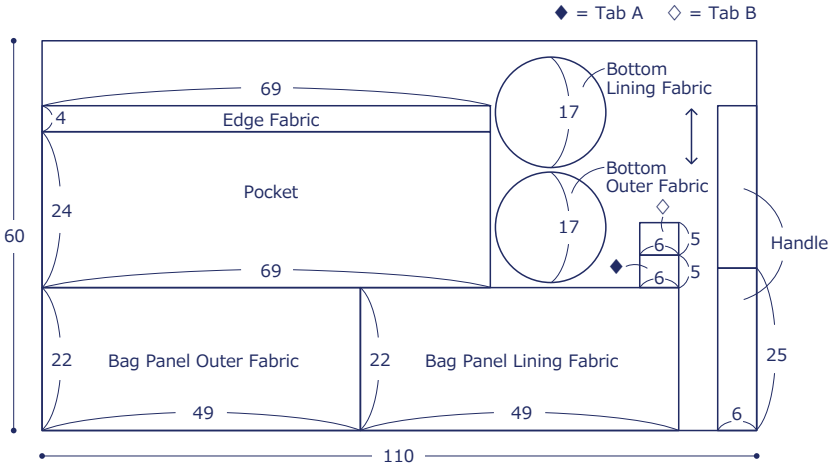

Instructions

Front Side - (FrS), Reverse Side (RvS)

1. Make the pocket

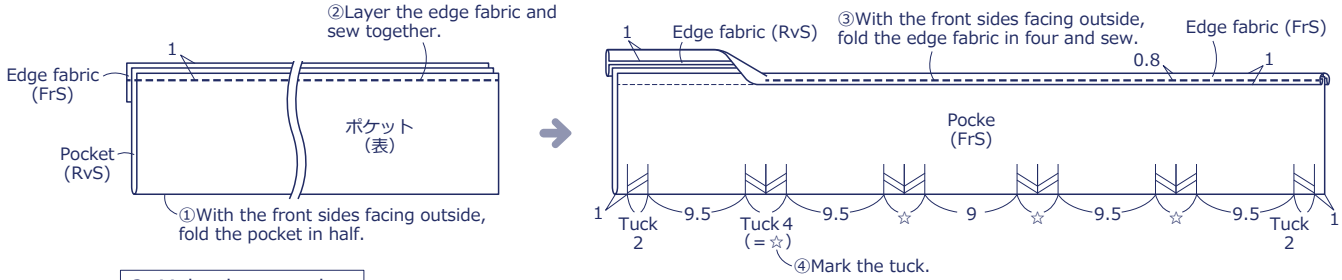

2. Make the outer bag

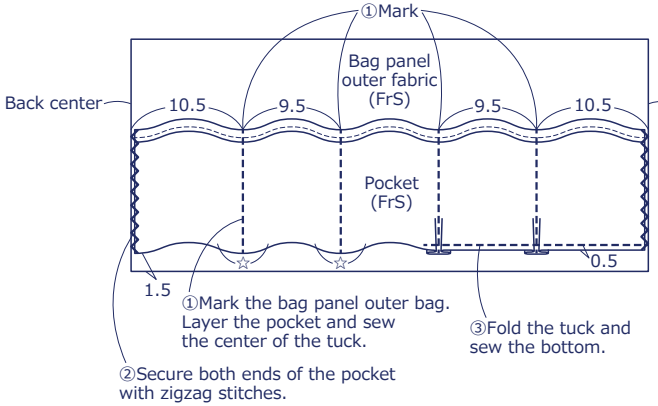

3. Make the lining bag

Repeat the same process with bag panel lining fabric and bottom lining fabric, following steps ②④～⑥.

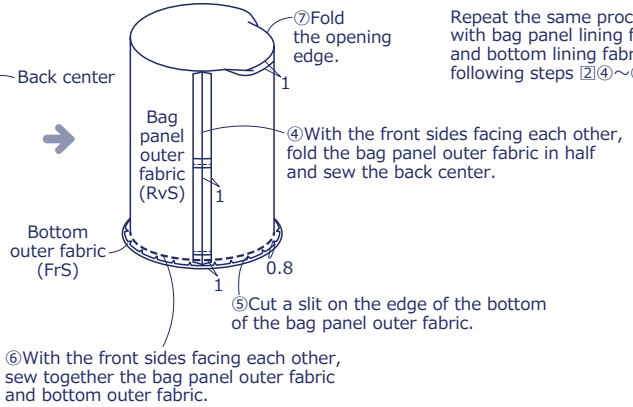

4. Make the handle and tab

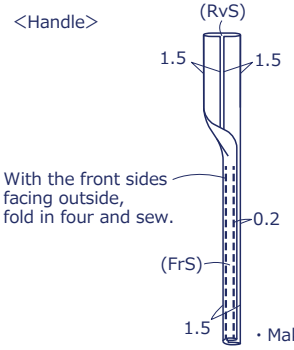

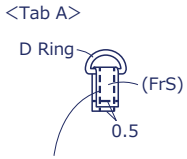

Make the tab using the same process for the handle.
Insert through D ring, fold in half and baste.
・Repeat the same process for Tab B.
For B, insert through swivel hook.

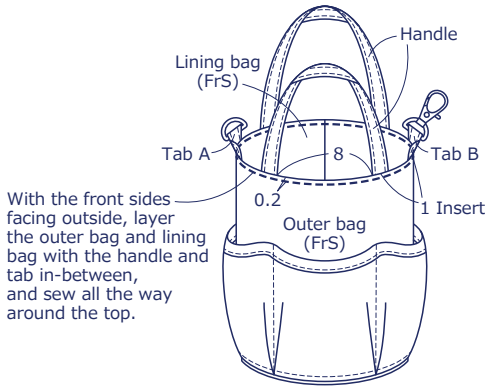

With the front sides facing outside, layer the outer bag and lining bag with the handle and tab in-between, and sew all the way around the top.